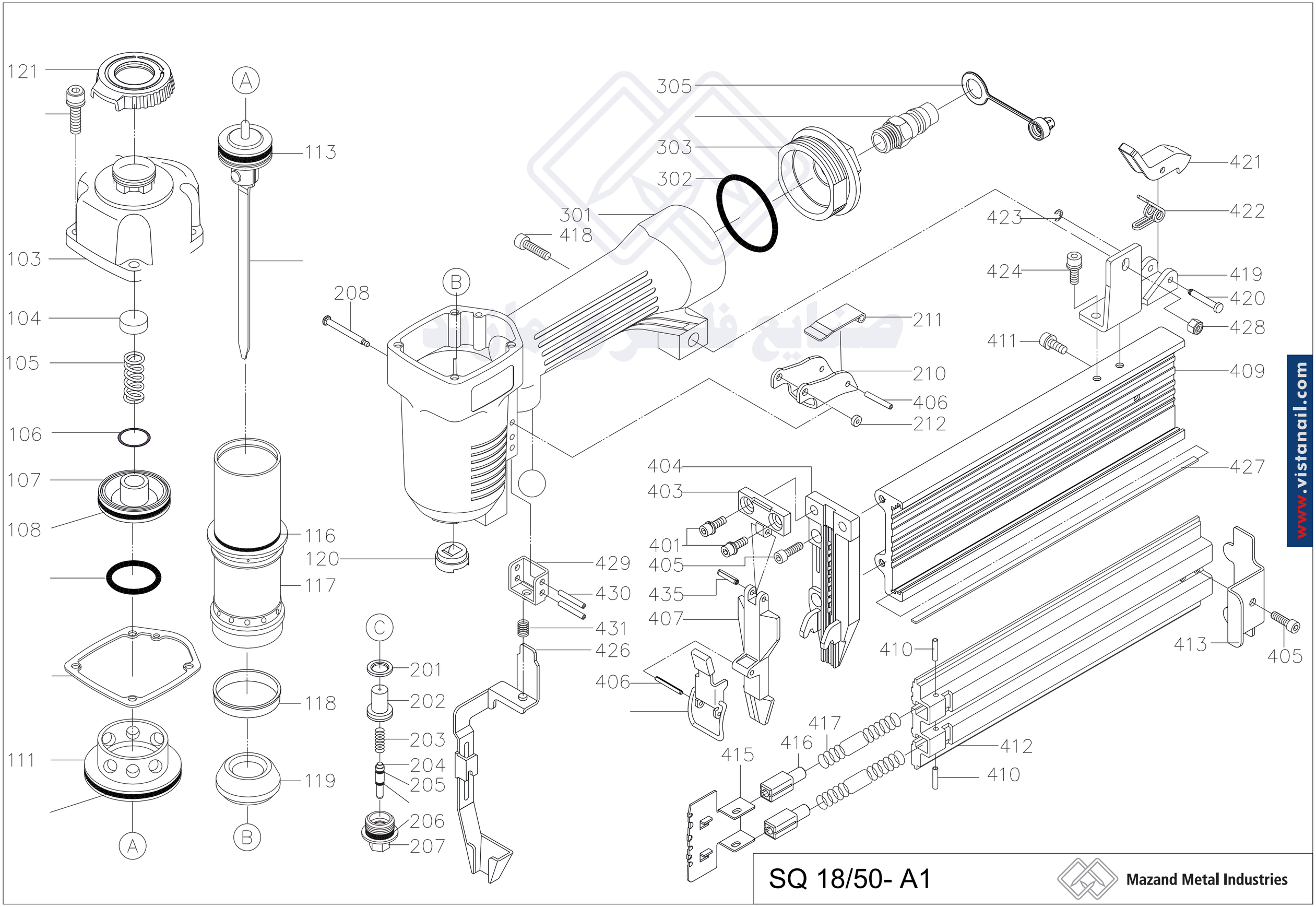

SQ 18/50- A1

Mazand Metal Industries