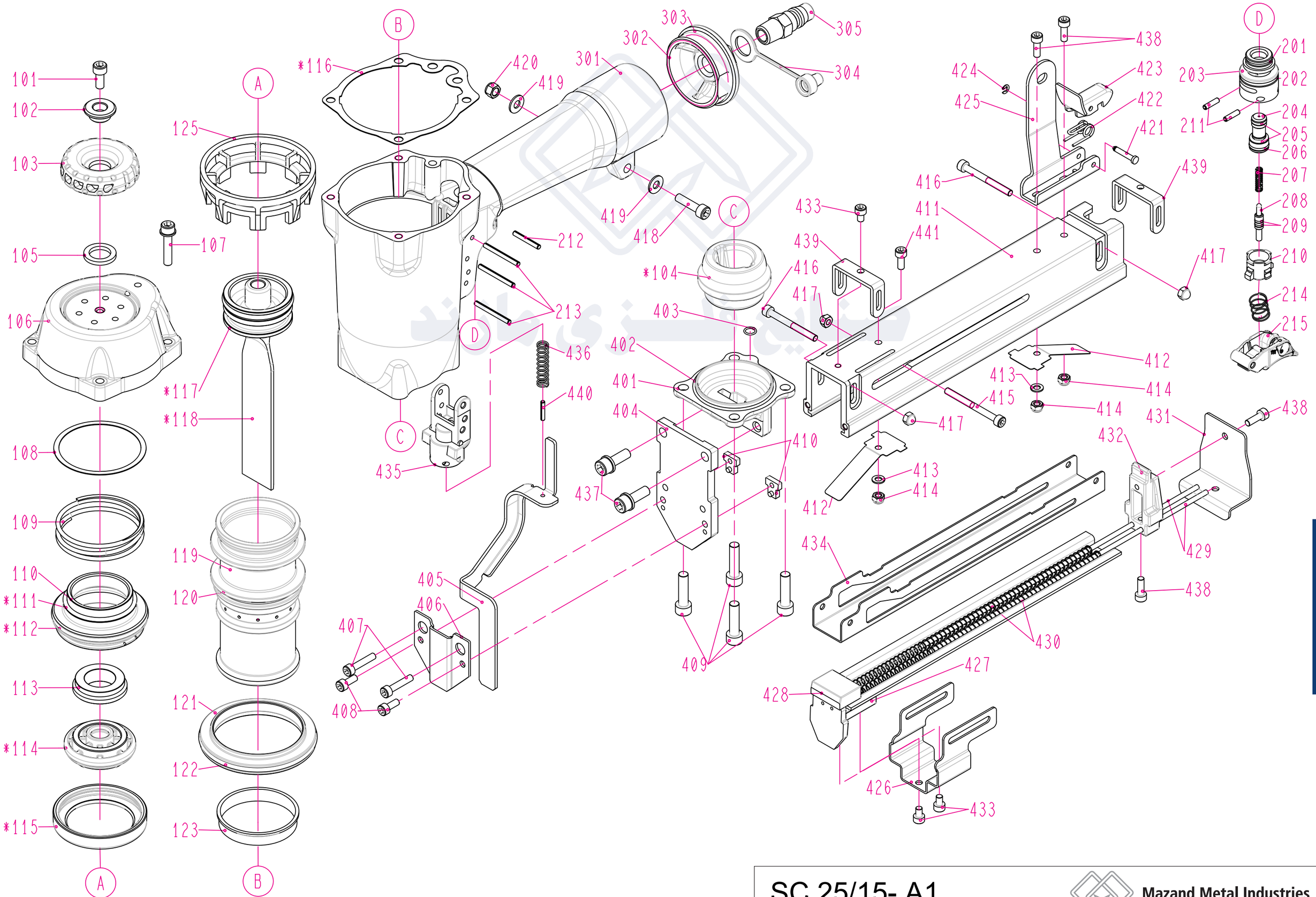

SC 25/15- A1

Mazand Metal Industries