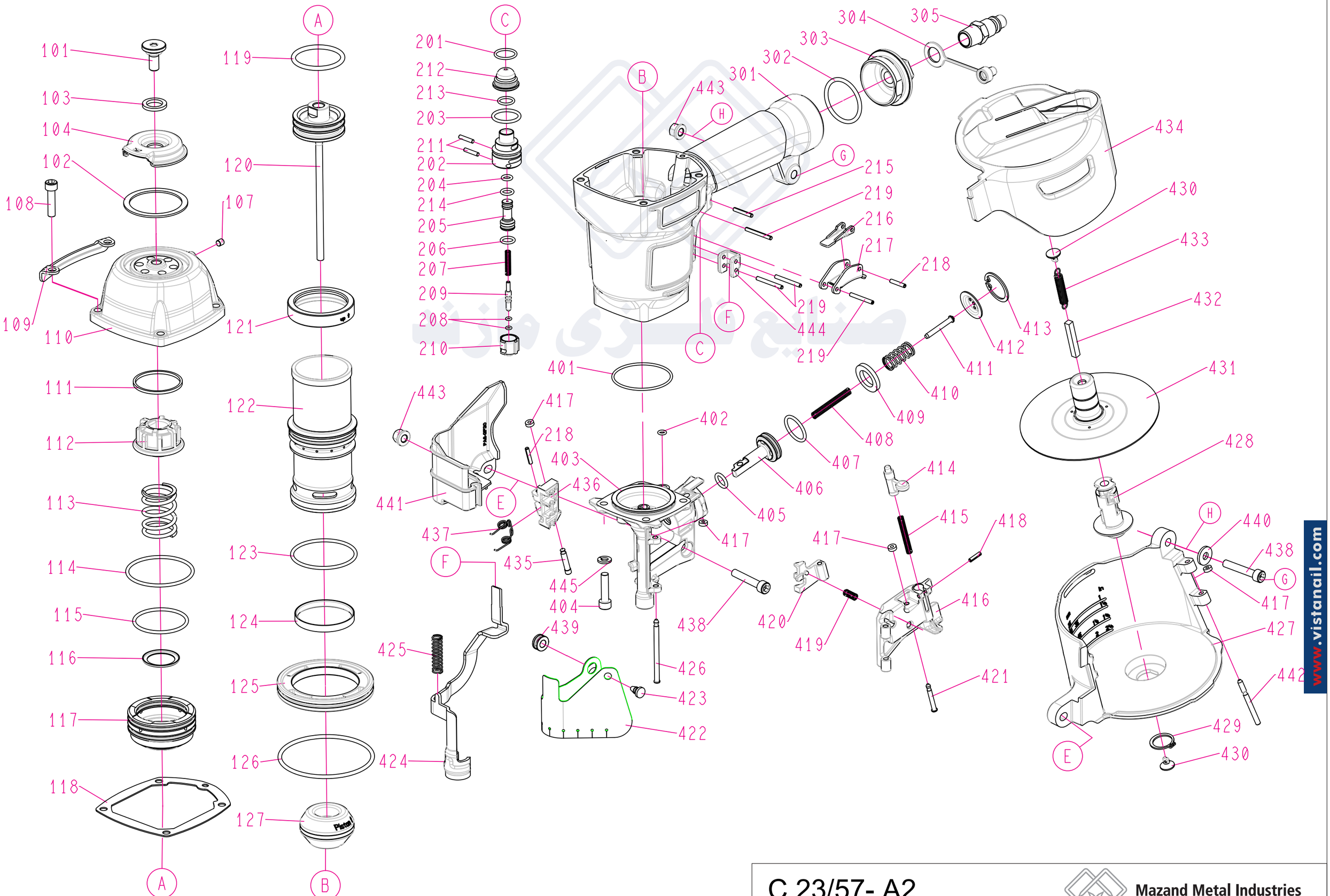

C 23/57- A2

Mazand Metal Industries

www.vistanail.com